





WAVE SOFA - 1 MODULE

DIMENSIONS		FABRIC FOR COM	LEAD TIME
Small	in W. 90.5 x D. 41.3 x H. 29.9 / Seat height 14.5 cm W. 230 x D. 105 x H. 76 / Seat height 37	10 mts	12-14 weeks
Large	in W. 110.2 x D. 44.1 x H. 30.3 / Seat height 14.5 cm W. 280 x D. 112 x H. 77 / Seat height 37	14 mts	12-14 weeks

Small

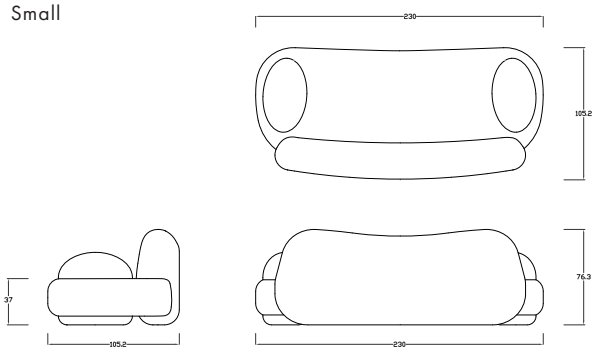

Large

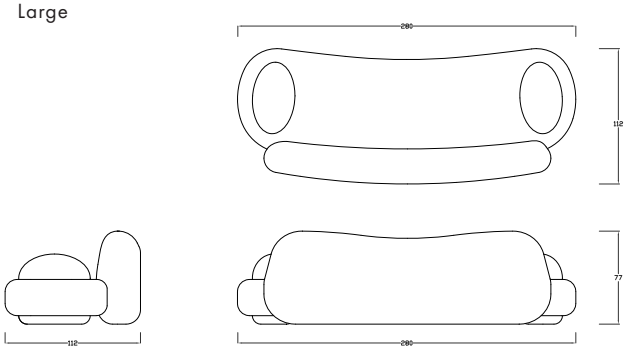

© copyright emma donnersberg 2026

WAVE SOFA - LEO

54% Wool, 19% Cotton, 15% Viscose, 10% Linen, 2% Polyester
Width : 132 cm / 53.1 in, Martindale : 70.000



SNOW
ED-E-FALEO-002



BUFF
ED-E-FALEO-003

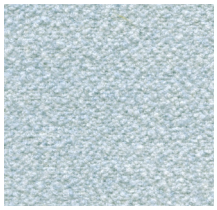

MIRAGE
ED-E-FALEO-004

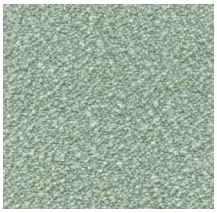

SALT WALTER
ED-E-FALEO-005



SUN
ED-E-FALEO-006

WAVE SOFA - LIV

54% Wool, 19% Cotton, 15% Viscose, 10% Linen, 2% Polyester
Width : 132 cm / 53.1 in, Martindale : 70.000



CORAL
ED-E-FALIV-019



PEARL
ED-E-FALIV-020



GELATO
ED-E-FALIV-021



PARCHMENT
ED-E-FALIV-022



SEAFORM
ED-E-FALIV-023

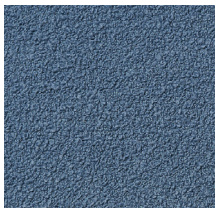

SWELL
ED-E-FALIV-024



MASALA
ED-E-FALIV-025



PISTACHIO
ED-E-FALIV-026



MIDNIGHT
ED-E-FALIV-027



FERN
ED-E-FALIV-028



DUCKWEED
ED-E-FALIV-029



JASMINE
ED-E-FALIV-158

© copyright emma donnersberg 2026