

GALET DINING TABLE ROUND – ALL WOOD

MATERIAL	DIMENSIONS (Custom sizes available)		LEAD TIME
Tray in wood (Oak or Walnut) Legs in wood (Oak or Walnut)	Small	in D. 55.1 x H. 29.1 cm D. 140 x H. 74	14 weeks
	Large	in D. 78.7 x H. 29.1 cm D. 200 x H. 74	14 weeks

Small

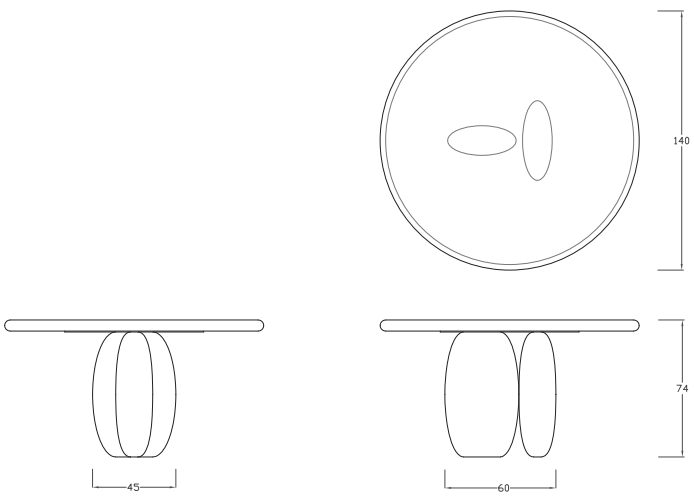

© copyright emma donnersberg 2024